TMP 114

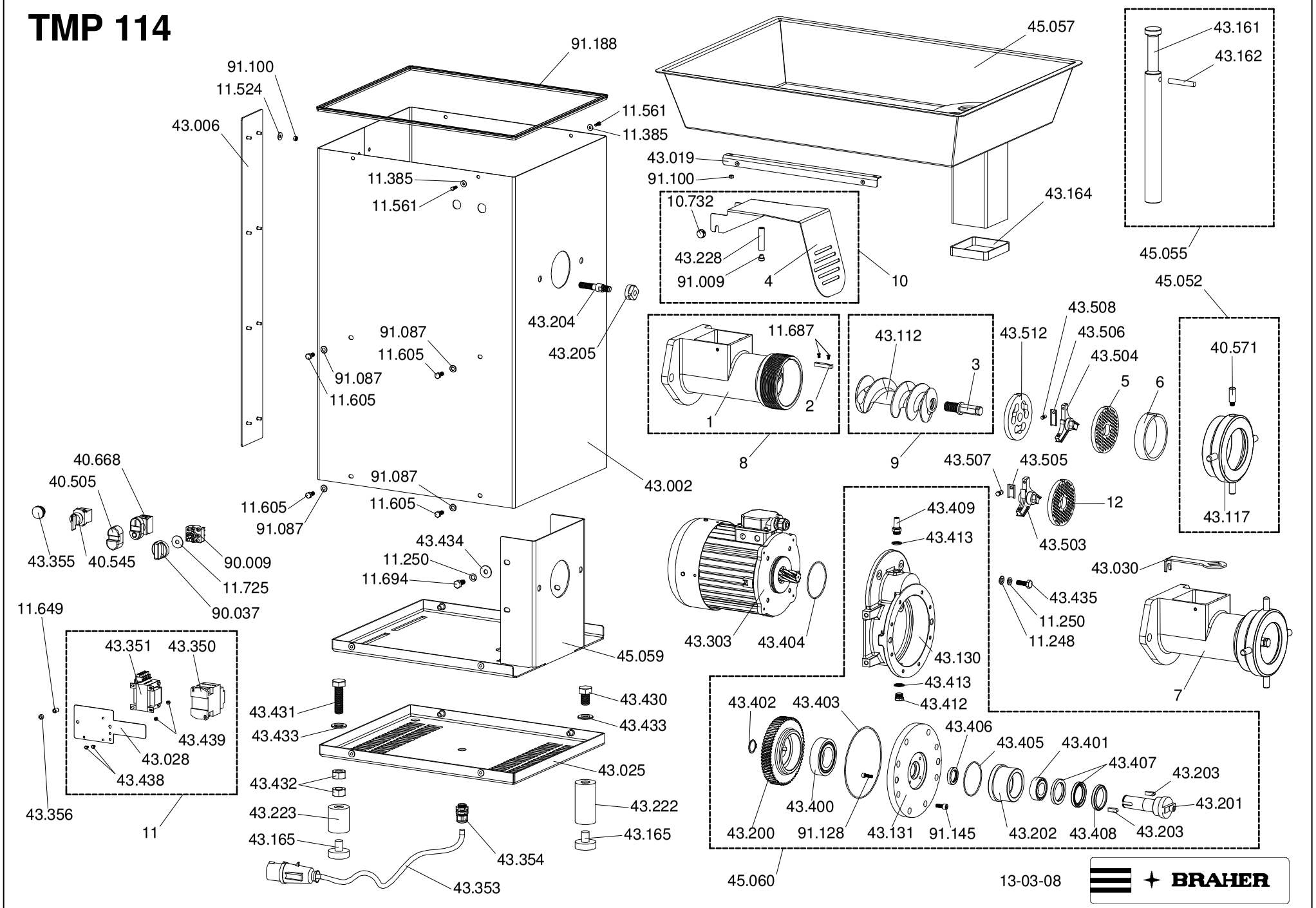
91.188
91.100
11.524
43.006
11.561
11.385
11.385
11.561
43.019
91.100
45.057
43.161
43.162
43.164
45.055
10.732
43.228
91.009
4
10
43.204
43.205
91.087
11.605
91.087
11.605
11.687
1
2
8
43.112
3
9
43.508
43.512
43.506
43.504
5
6
45.052
40.571
43.117
43.002
91.087
11.605
11.605
91.087
40.668
40.505
43.355
40.545
90.009
11.725
90.037
43.434
11.250
11.694
43.303
43.404
43.507
43.505
12
43.503
43.409
43.413
43.130
43.413
43.412
43.030
43.435
11.250
11.248
7
11.649
43.351
43.350
43.439
43.028
43.438
43.356
11
45.059
43.431
43.433
43.430
43.433
43.025
43.432
43.223
43.165
43.222
43.165
43.354
43.353
43.402
43.403
43.406
43.405
43.401
43.407
43.203
43.201
43.200
43.400
91.128
43.131
91.145
43.202
43.408
43.203
45.060
13-03-08
BRAHER